Tutorial – 08

Department of Physics **Shiv Nadar University**

---

1. Consider two conducting coaxial cylindrical shells of radii 'a' and 'b', ($a < b$), as shown in figure below. The length of both cylinders is 'L' which is much larger than (b−a), the separation between the cylinders, so that edge effects can be neglected. The inner cylinder is grounded (electric potential = 0) while the outer cylinder is supplied a charge −Q which gets distributed uniformly on the surface (Again we are neglecting edge effects). As a consequence, a charge +Q (drawn from the ground) gets induced uniformly on the inner cylinder. Calculate the ***electric field*** as well as the ***electric potential*** in the regions (i) $0 \leq r < a$, (ii) $a < r < b$, and (iii) $r \geq b$. Here r is the radial distance measured from the common axis of the cylinders.

[For the regions (i) and (iii) assume, in addition, that $L >> a, b$. Moreover, for region (iii) the observation point should be close to the outer cylinder — it should not be at a distance comparable to or larger than the system dimension, i.e., $r - b << L$.]

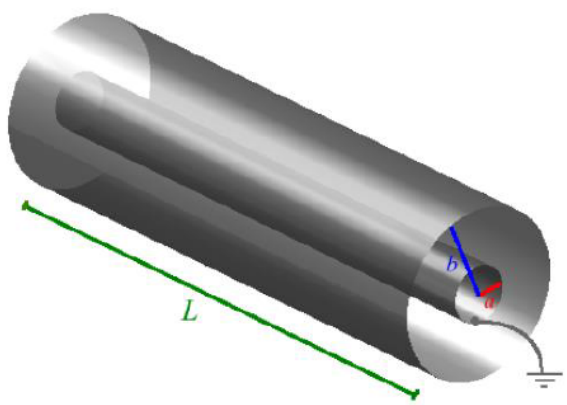

2. Verify the **discontinuity of electric field** and **continuity of the electric potential** at the surfaces of the two cylindrical shells described in problem 1.

3. What is the capacitance of the coaxial cylinder system of problem 1? Does the answer depend on Q?

4. A sphere of radius R, centered at origin, carries charge density

$$\rho(r,\theta) = k\frac{R}{r^2}(R - 2r)sin\,\theta$$

where 'k' is constant and r, θ are usual spherical polar coordinates. Find the approximate potential for points on the z-axis, far from the sphere

[Hint: Consider taking the multipole expansion of V]